Experiment–7: Two Stage RC Coupled Amplifier

Group no: - 14	Date of Experiment: - 12/10/2023
Roll no: - 22CS02002	Name: - Soham Chakraborty

Pre-Lab Work: LTSpice simulation.

Circuit

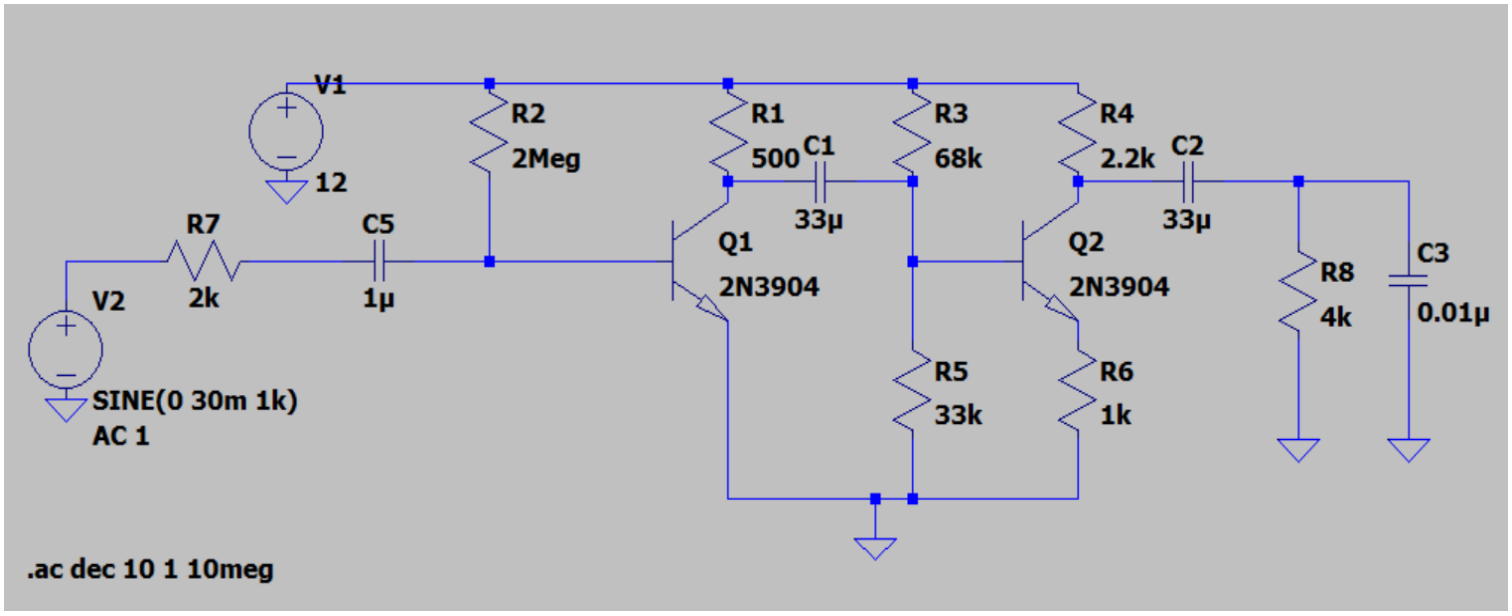

AC Analysis

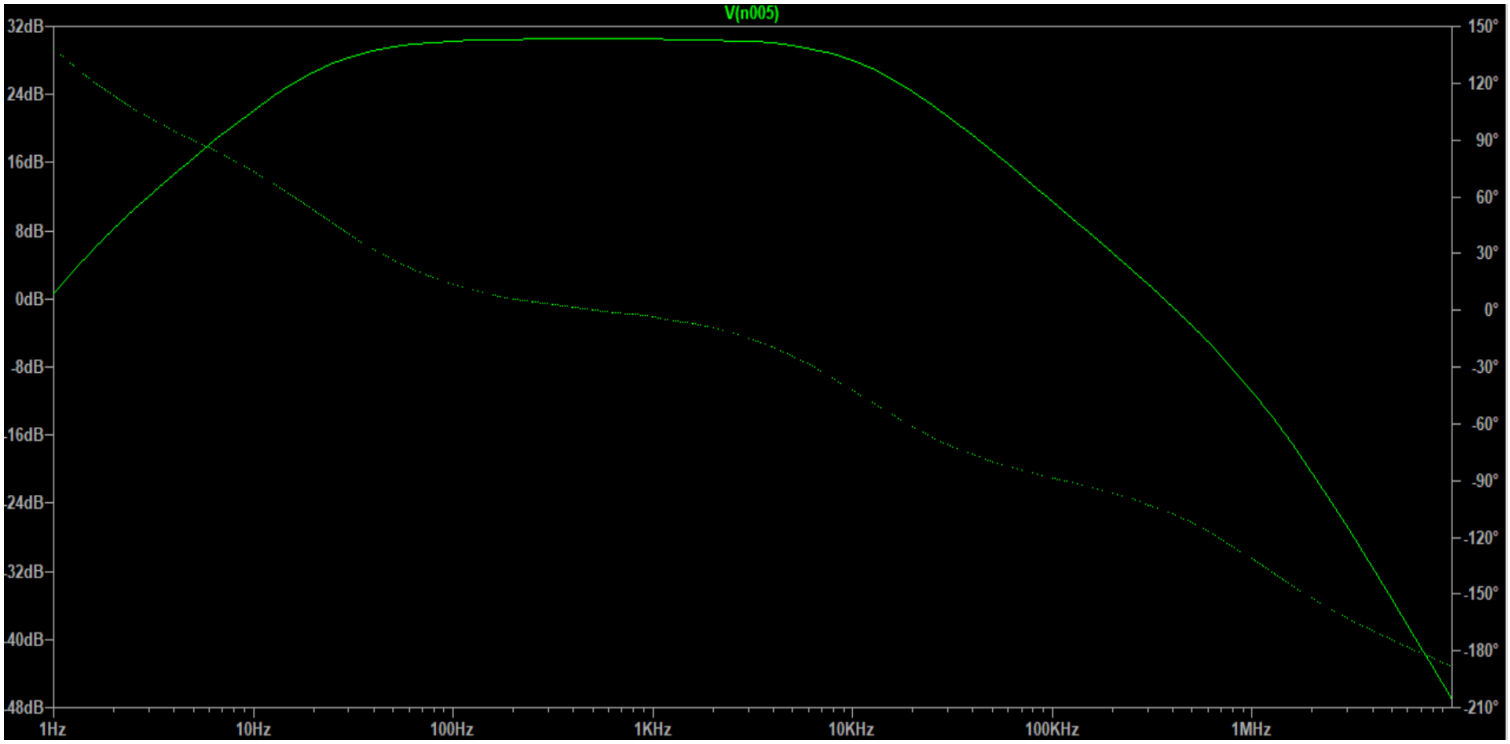

Operating Points

```
       --- Operating Point ---

V(n001):        12              voltage
V(n002):        11.0658         voltage
V(n008):        0.669143        voltage
V(n003):        3.70021         voltage
V(n004):        5.38585         voltage
V(n009):        3.01636         voltage
V(n005):        7.10932e-13     voltage
V(n007):        1.33829e-15     voltage
V(n006):        0               voltage
Ic(Q2):         0.00300643      device_current
Ib(Q2):         9.92817e-06     device_current
Ie(Q2):         -0.00301636     device_current
Ic(Q1):         0.00186843      device_current
Ib(Q1):         5.66543e-06     device_current
Ie(Q1):         -0.0018741      device_current
I(C1):          2.43064e-16     device_current
I(C2):          -1.77733e-16    device_current
I(C3):          7.10932e-33     device_current
I(C5):          6.69143e-19     device_current
I(R1):          0.00186843      device_current
I(R2):          5.66543e-06     device_current
I(R3):          0.000122056     device_current
I(R4):          0.00300643      device_current
I(R8):          1.77733e-16     device_current
I(R7):          6.69143e-19     device_current
I(R6):          0.00301636      device_current
I(R5):          0.000112128     device_current
I(V1):          -0.00500259     device_current
I(V2):          6.69143e-19     device_current
```

Two-stage RC Coupled Amplifier

Aim of the Experiment: - Build and observe the frequency response of the amplifier and find the gains for both stages.

Equipment required: -

- Required resistor values- 2 MΩ, 68 kΩ, 33 kΩ, 2.2 kΩ, 500 Ω, 2 kΩ, 1 kΩ, 4 kΩ
- Breadboard (×1)
- Constant DC power supply 12V
- Function Generator
- DSO(Digital Storage Oscilloscope)
- 2N3904 transistor.
- Capacitor- **33uF(*2), 1uF, 0.01uF.**
- Connecting wires

Circuit Diagram: -

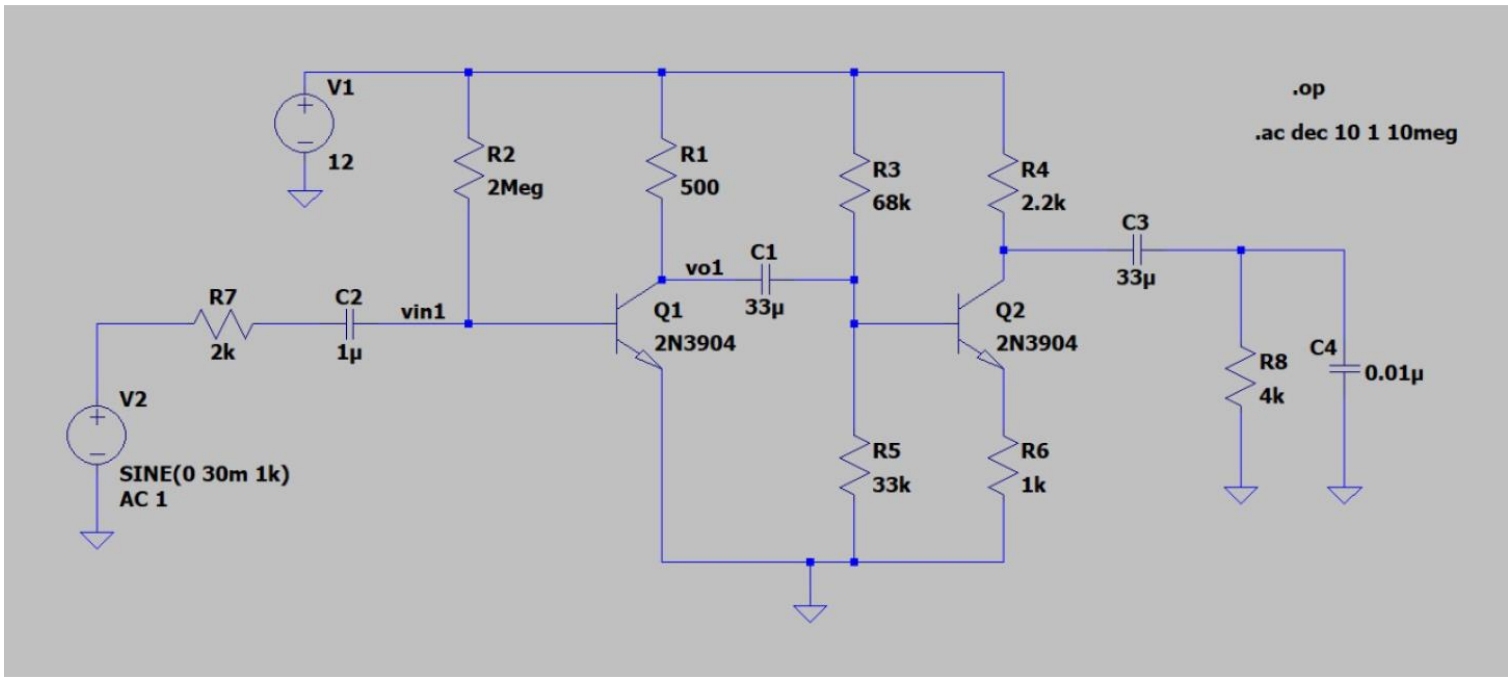

Observation Table:-

Frequency (in Hz)	V_{in} (in mVpp)	V_{out} (in Vpp)	**Gain**	**Gain** (in dB)
10	30	0.310	10.36	20.31
13	30	0.401	13.38	22.53
15	30	0.424	14.15	23.02
20	30	0.541	18.05	25.13
25	30	0.620	20.67	26.31
40	30	0.635	21.18	26.52
50	30	0.661	22.05	26.87
75	30	0.666	22.20	26.93
100	30	0.674	22.49	27.04
250	30	0.696	23.20	27.31
500	30	0.715	23.85	27.55
750	30	0.739	24.66	27.84
1k	30	0.743	24.77	27.88
2.5k	30	0.729	24.32	27.72
5k	30	0.708	23.60	27.46
7.5k	30	0.680	22.69	27.12
10k	30	0.546	18.21	25.21
25k	30	0.381	12.72	22.09
50k	30	0.271	9.05	19.14
75k	30	0.177	5.91	15.44
100k	30	0.121	4.05	12.17
250k	30	0.062	2.09	6.43
500k	30	0.034	1.15	1.25
750k	30	0.022	0.76	-2.34
1M	30	0.013	0.46	-6.67

Graphs:-

Plot of Gain(dB) vs Frequency on a semi-log graph

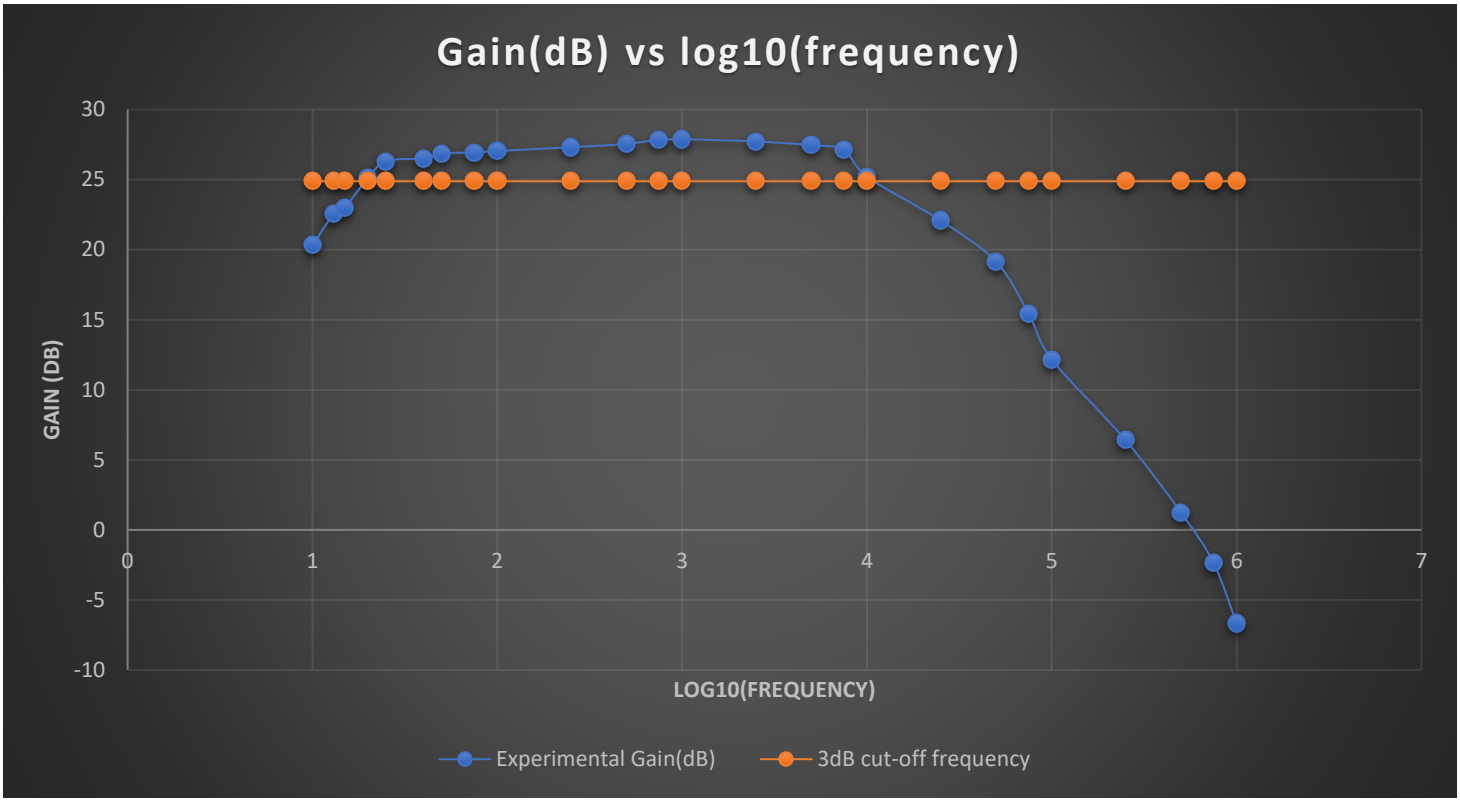

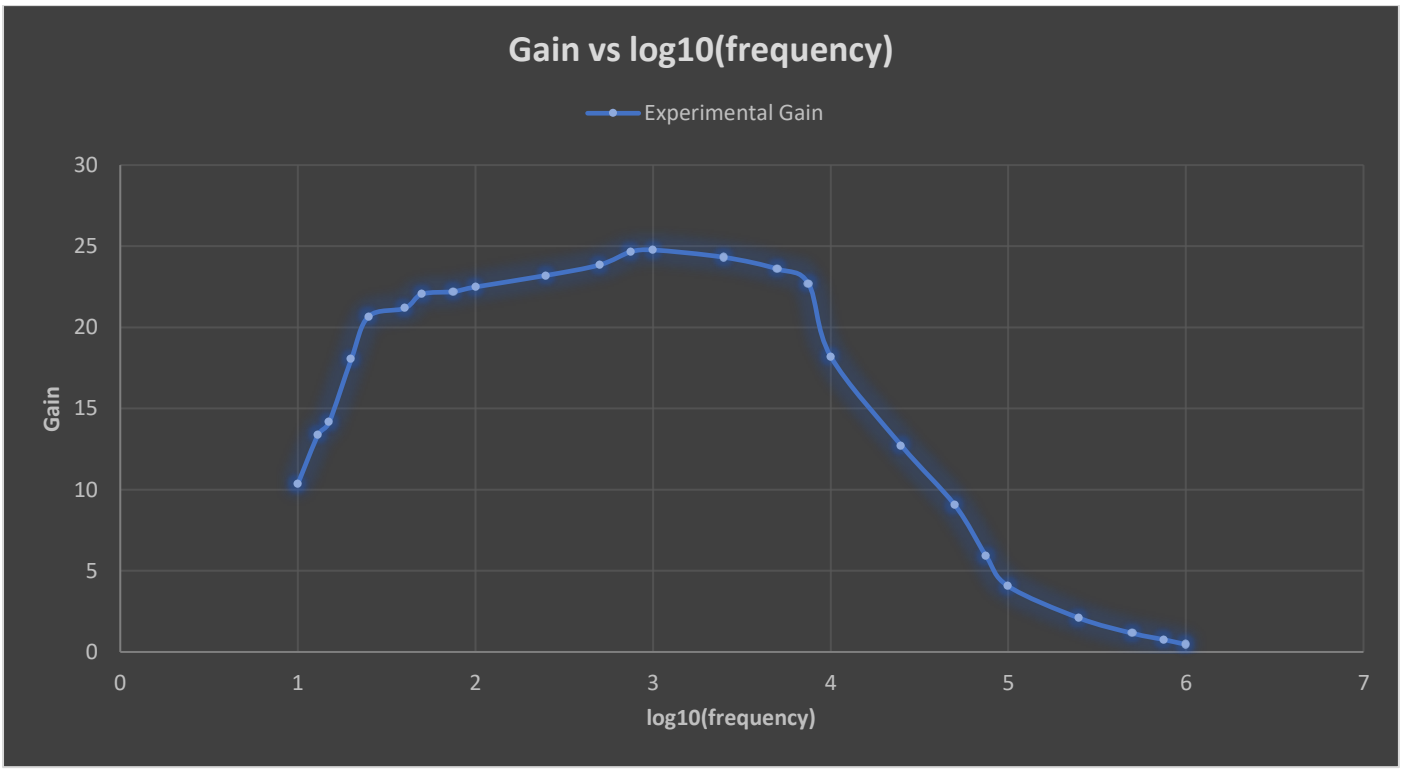

Calculations:-

1. Theoretical:-

Considering the first part of the amplifier

Part-I:

$I_B = \frac{VDD-Vbe}{Rb} = 5.65\ \mu A$

$r_\pi = \frac{VT}{Ib} = 4.6\ k\Omega$

$A_{V1} = -\frac{\beta Rc}{r\pi} = -28.804$

$R_{in1} = R_B \parallel r_\pi = 4.6\ k\Omega$

$R_{out1} = R_C = 500\ \Omega$

Part-II:

$R_{TH} = \frac{Rb1 \times Rb2}{Rb1+Rb2} = 22.217\ k\Omega$

$V_{TH} = \frac{VDD \times Rb2}{Rb1+Rb2} = 3.92\ V$

$I_B = \frac{Vth-Vbe}{Rth+(1+\beta)Re} = 11.18\ \mu A$

$r_\pi = \frac{Vt}{Ib} = 2.33\ k\Omega$

$A_{V2} = \frac{-\beta Rc}{r\pi+(1+\beta)Re} = -2.173$

$R_{in2} = R_{th} \parallel (r_\pi + (1+\beta)R_E) = 20.518\ k\Omega$

$R_{out2} = R_c = 2.2\ k\Omega$

Equivalent Overall Gain

$$\boxed{A_V = A_{V1} \times A_{V2} \times \frac{Rl}{Rl+Rout2} \times \frac{Rin2}{Rin2+Rout1} \times \frac{Rin1}{Rin1+Rs} = 27.53}$$

$$\text{Gain(dB)} = 20\log(A_V) = 28.78$$

Cut-off frequencies:-

- $f_{L1} = \frac{1}{2\pi(Rin1+Rs)Cc1} = 24.16$ Hz
- $f_{L2} = \frac{1}{2\pi(Rl+Rout2)Cc2} = 0.78$ Hz
- $f_{L3} = \frac{1}{2\pi(Rout1+Rin2)Cc3} = 0.23$ Hz
- $f_H = \frac{1}{2\pi(Rl||Rout2)Cl} = 11.23$kHz

➢ $f_L = \max(f_{L1}, f_{L2}, f_{L3}) = 24.16$ Hz
➢ $f_H = 11.23$ kHz

Bandwidth = $f_H - f_L$ = 11.20 kHz

2. Observations:-

Mid-Band Gain = $\frac{Vout}{Vin} = 24.77$

Gain (in dB) = 27.88 dB

Lower cut-off frequency f_L = 16Hz

Upper cut-off frequency f_H = 14 kHz

Bandwidth = $f_H - f_L$ = 13.12 kHz

3. LTSpice Values:-

Mid-Band Gain = $\frac{Vout}{Vin} = 33.53$

Gain (in dB) = 30.51 dB

Lower cut-off frequency f_L = 24.5Hz

Upper cut-off frequency f_H = 11.1 kHz

Bandwidth = $f_H - f_L$ = 10.09 kHz

Conclusion:-

- We Observed the functioning of a 2-stage RC Coupled Amplifier and it was observed that LTSpice simulated values, theoretical values/calculations and observed values are in close agreement with each other.
- There are deviations in the Simulated value partly because of the fact that in the lab **BC547** was used whereas in the manual and simulation **2N3904** was used.
- The Mid-band Gain, Upper and lower cut-off frequency, was calculated numerically and from the experimental data as well as from the simulation in LTSpice.
- It was observed that the LTSpice simulation and the experimentally calculated values, match in their basic characteristics but have some differences in the numerical values, this might be due to various errors. But in this case, this is most likely due to errors in receiving signal by the DSO, which might have caused errors in values due to lack of precision at low frequency and amplitude.

Discussion:-

- **What is 3dB cut-off frequency?**

3dB cutoff frequency also known as the half-power frequency, is a point in frequency response of various electronic and electrical systems. It represents the frequency at which the signal's power or amplitude is reduced to half of its maximum value, indicating a signification drop in signal strength.

Half the power, represents $\frac{1}{\sqrt{2}}$ times gain. Using the equation for gain.

$\text{Gain(dB)} = 20\log\left(\frac{1}{\sqrt{2}}\right) \approx 3\text{dB}.$

Hence, from here we get the term 3dB.

The gain at this frequency is 3dB lower than max. gain.

- **What does bandwidth mean?**

Bandwidth can refer to the range of frequencies over which the electronic component, circuit, or device can operate effectively. It is often used to describe the operations limit of amplifiers, filters and other electronic filters.

Mathematical formula for bandwidth for filters is:

$$\textbf{Bandwidth} = f_H - f_L$$

This formula denotes the range over which the signal gives a non-zero output or in this case has a drop in Gain(dB) of more than 3dB from the max gain or a Power drop of more than half of max. Power.